NATIONWIDE BATTERY

MARINE | GOLF | INDUSTRIAL | AUTO | SPECIAL APPLICATIONS | SOLAR

MOTIVE 5SHP-AES

- **VRLA AGM**

  - BCI Group DIN, 12V
  - Reserve Capacity [Ah@20hr rate]: 130
  - Reserve Capacity [Ah@100hr rate]: 135
  - Energy [kWh@100hr]: 1.62
  - Weight: 96.1 lbs.
  - Length: 13.43 in (341 mm)
  - Width: 6.69 in (170 mm)
  - Height: 10.35 in (263 mm)
  - AP

TRUE DEEP CYCLE



AES AGM

UP TO 3X THE CYCLE LIFE OF STANDARD AGM BATTERIES

The new Trojan AES AGM Batteries deliver up to 3x the cycle life with high, sustained performance versus standard AGM. And, the battery maintains high capacity in extreme deep-cycling (up to 100% DoD), partial charging, and challenging environments.

It outperforms the competition in these areas:

•**Lasts Longer:** Up to 3x longer cycle life than standard AGM. Validated at 1,200 cycles at 100% DoD vs. 400 cycles for AGM.

•**Performs in harsh conditions:** Robust performance in extreme temperatures and conditions. Temperature range from -40°F to 140°F (-40°C to 60°C).

•**Delivers harmless PSoC:** Tested to withstand partial state of charge, again and again.

TROJAN BATTERY COMPANY AUTHORIZED DEALER

TROJAN BATTERY COMPANY

DATA SHEET

MODEL **5SHP-AES**
VOLTAGE **12V**
CAPACITY **130Ah @ 20Hr**
MATERIAL **Polypropylene**
BATTERY TYPE **Deep Cycle VRLA AGM**

12 VOLT

PRODUCT + PHYSICAL SPECIFICATIONS

BCI Group Size	Type	Voltage	Cell(s)	Terminal Type [G]	Dimensions [C] Inches (mm)			Weight Lbs. (kg)
					Length	Width	Height [F]	
DIN	5SHP-AES	12	6	M8 / AP	13.43 (341)	6.69(170)	10.35(263)	96.1(43.6)

ELECTRICAL SPECIFICATIONS

Cranking Performance		Capacity [A] Minutes		Capacity [B] Amp-Hours (AH)				Energy (kWh)	Internal Resistance (mΩ)	Short Circuit Current (amps)
C.C.A.[D] @ 0°F (-18°C)	C.A.[E] @ 32°F (0°C)	@ 25 Amps	@ 75 Amps	5-Hr	10-Hr	20-Hr	100-Hr	100-Hr		
—	—	260	64	110	124	130	135	1.62	**2.76**	3082

CHARGING INSTRUCTIONS

CHARGER VOLTAGE SETTINGS (AT 77°F/25°C)

System Voltage	12V	24V	36V	48V
Maximum Charge Current	50% of C20			
Absorption Charge	14.40	28.80	43.20	57.60
Float Charge	13.50	27.00	40.50	54.00

CHARGING TEMPERATURE COMPENSATION

Add	Subtract
0.005 volt per cell for every 1°C below 25°C **0.0028 volt per cell for every 1°F below 77°F**	**0.005 volt per cell for every 1°C above 25°C** **0.0028 volt per cell for every 1°F above 77°F**

OPERATIONAL DATA

Operating Temperature	Self Discharge
-4°F to 122°F (-20°C to 50°C) **At temperatures below 32°F (0°C) maintain a state of charge greater than 60%**	**Less than 3% per month depending on storage temperature conditions**

STATE OF CHARGE MEASURE OF OPEN-CIRCUIT VOLTAGE

PERCENTAGE CHARGE	CELL	12 VOLT
100	2.14	12.84
75	2.09	12.54
50	2.04	12.24
25	1.99	11.94
0	1.94	11.64

TROJAN BATTERY COMPANY AUTHORIZED DEALER

TRUE DEEP CYCLE

TROJAN SINCE 1925 QUALITY

Designed in compliance with applicable BCI, DIN, BS and IEC standards. Tested in compliance to BCI and IEC standards.

WWW.NATIONWIDE-BATTERY.COM

NATIONWIDE BATTERY

TROJAN 5SHP-AES PERFORMANCE

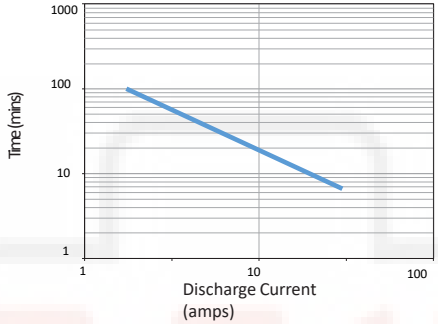

SELF DISCHARGE VS. TIME[E]

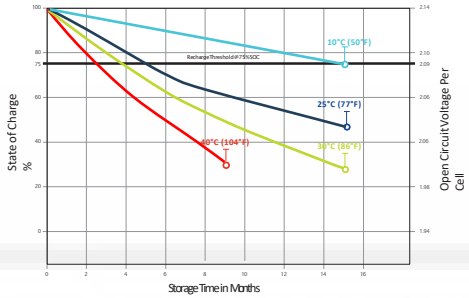

PERCENT CAPACITY VS. TEMPERATURE

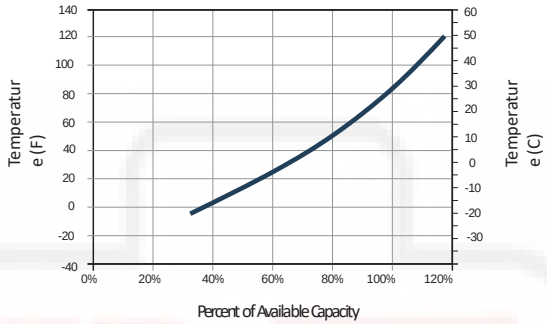

BATTERY DIMENSIONS

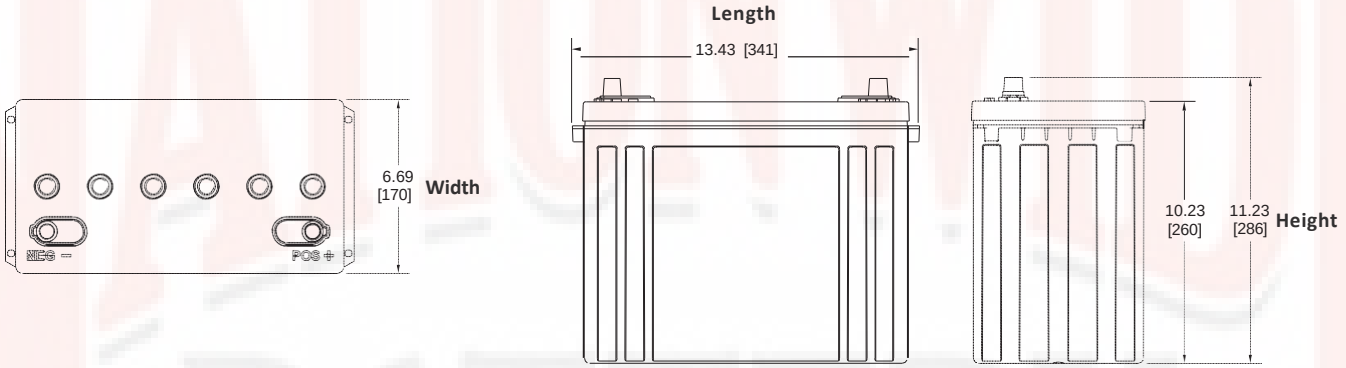

TERMINAL CONFIGURATIONS

M8	M8	M8	M8 WITH AP ADAPTER (ADAPTER PROVIDED BUT NOT INSTALLED)
	**Battery Height with Terminal in Inches (mm)** 10.35 (263) **Torque Values in-lb (Nm)** Bolt: 85 – 90 (10 – 11)	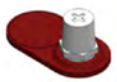	**Battery Height with Terminal in Inches (mm)** 11.18 (284) **Torque Values in-lb (Nm)** Connection to M8: 85 – 90 (10 – 11) Connection to AP: 50 – 70 (6 – 8)

A. The amount of amp-hours (Ah) a battery can deliver when discharged at a constant rate at 86°F (30°C) for all rates and maintain a voltage above 1.75 V/cell. Capacities are based on peak performance.
B. Dimensions may vary depending on type of handle or terminal. Batteries should be mounted with 0.5 inches (12.7 mm) spacing minimum.
C. Height taken from bottom of the battery to the highest point on the battery. Heights may vary depending on type of terminal.
D. Terminal images are representative only.
E. A boost charge should be performed every 6 months when batteries are in storage.
F. Weight may vary.

TROJAN BATTERY COMPANY AUTHORIZED DEALER

NATIONWIDE BATTERY